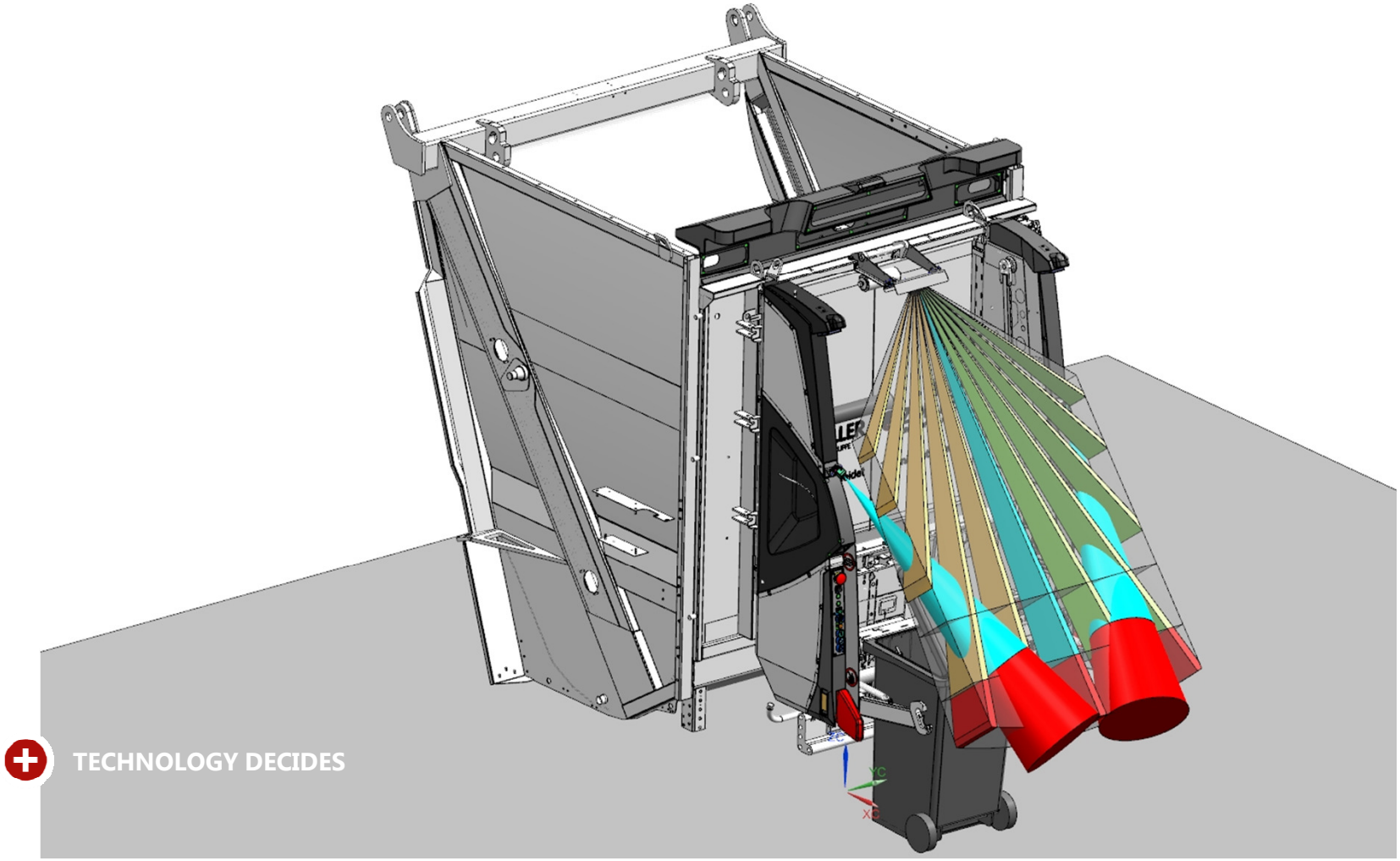

WORKER PROTECTION SYSTEM II

ZOELLER
KIRCHHOFF GRUPPE

WORKER PROTECTION SYSTEM II

Application range

The **Worker Protection System II** (WPS II) is designed as an assistance system and is intended to prevent serious injury of the operator. The following scenarios are considered:

- Scenario A: The operator gets caught with his clothes or bunch of keys by the container while it rises automatically.
- Scenario B: The operator remains in the danger zone of the lifter while it rises automatically.

The function of the WPS II is only effective when the container is emptied in AUTOMATIC mode.

The two lifter sides can be monitored separately.

The arrangement of the sensors guarantees that open container lids are only detected by the system with an angle of more than 38 ° (overladen container).

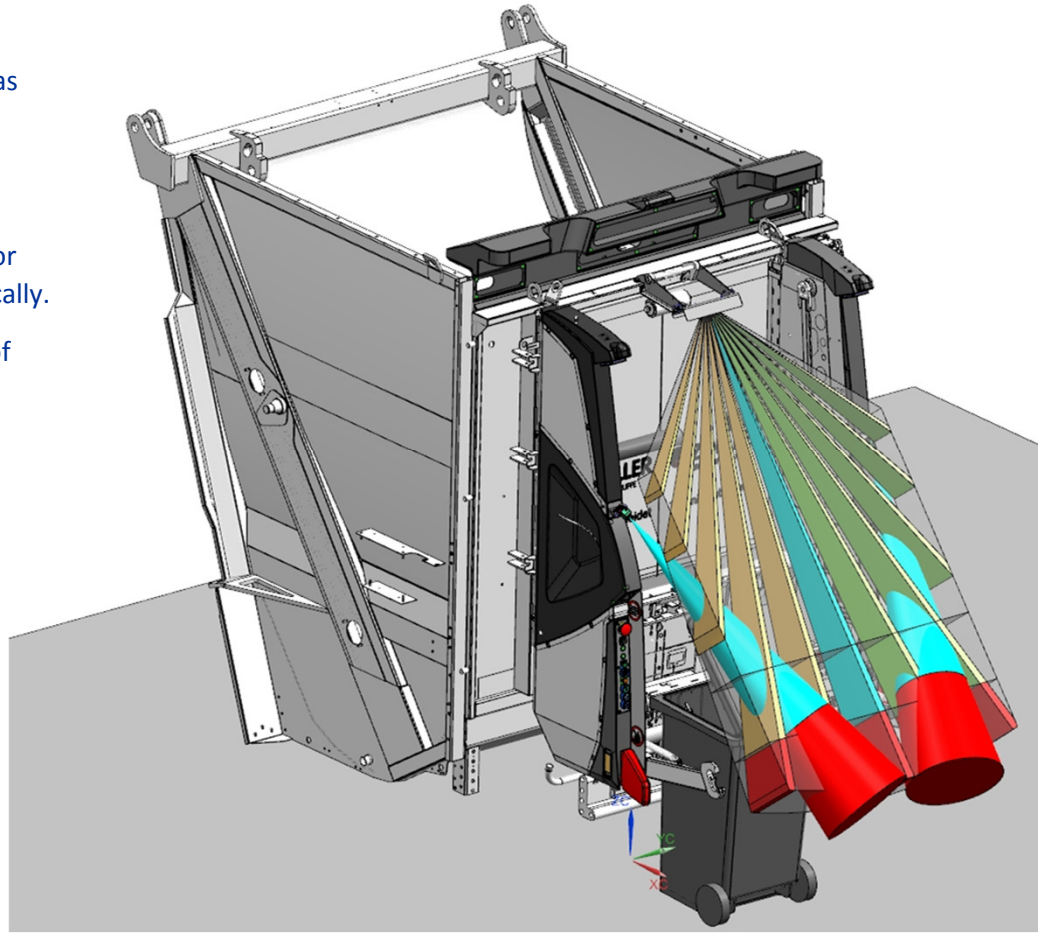

WORKER PROTECTION SYSTEM II

Sensors used (1)

The WPS II uses two different technologies to detect an object / a person which is too close to the container or is raised by a container.

The Multi-beam LED scanner (LIDAR) works with 11 infrared beams which are arranged at an angle of 8 ° between each other. The distance from the object to the sensor can be determined by means of the beams. The LIDAR sensor is mounted in the centre of the upper cross-beam.

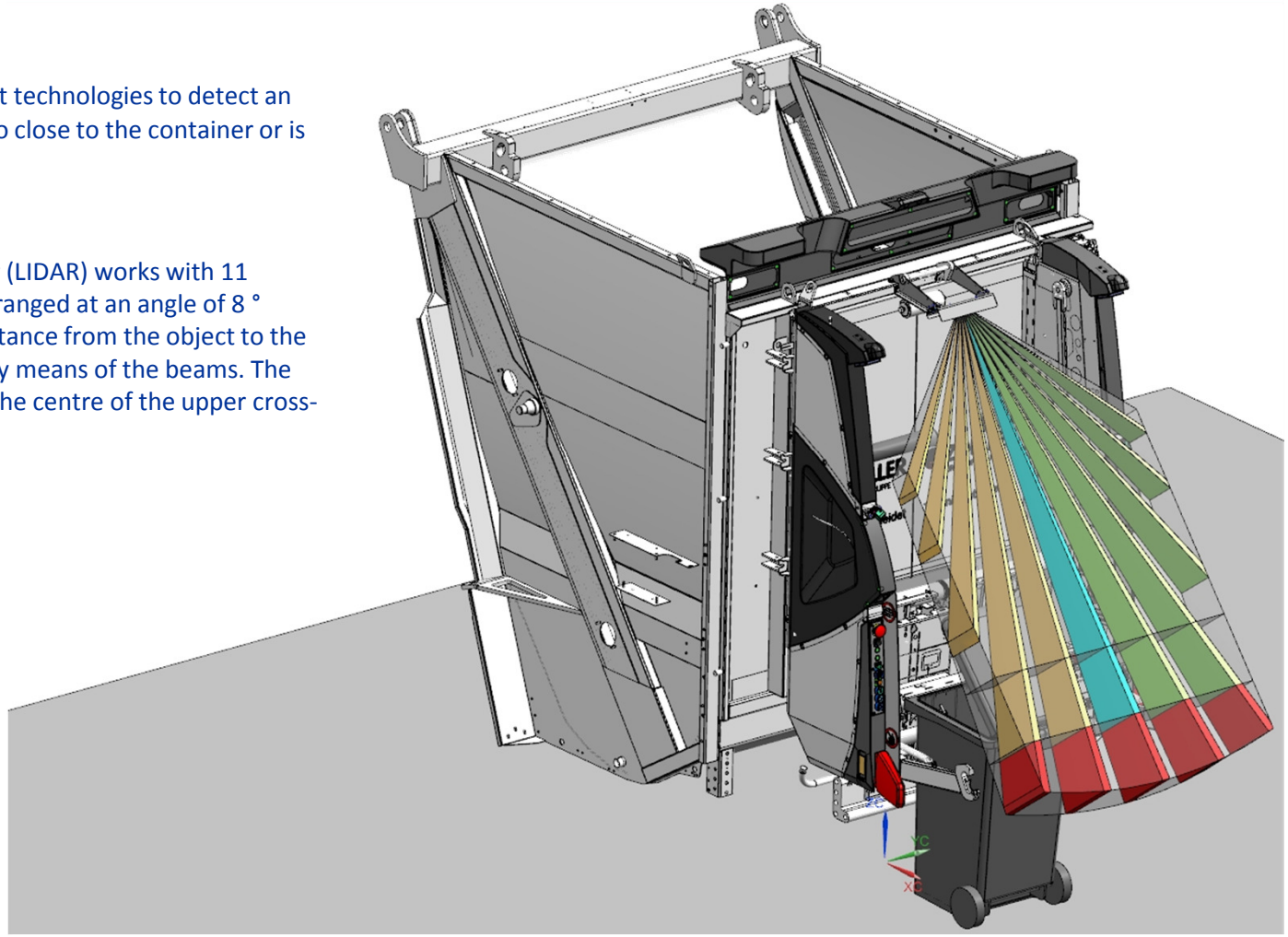

WORKER PROTECTION SYSTEM II

Sensors used (2)

In addition, two ultrasonic sensors are used to ensure redundancy with LIDAR. They calculate the distance to the object and send an analogue value of the distance. The sensors are mounted laterally halfway up the lifter side panel at a defined distance to the rotation plane.

The use of two different technologies guarantees at least Performance Level (PL) c.

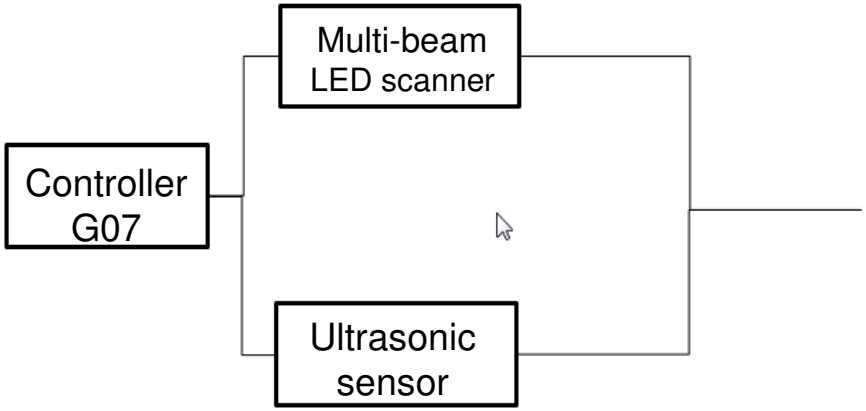

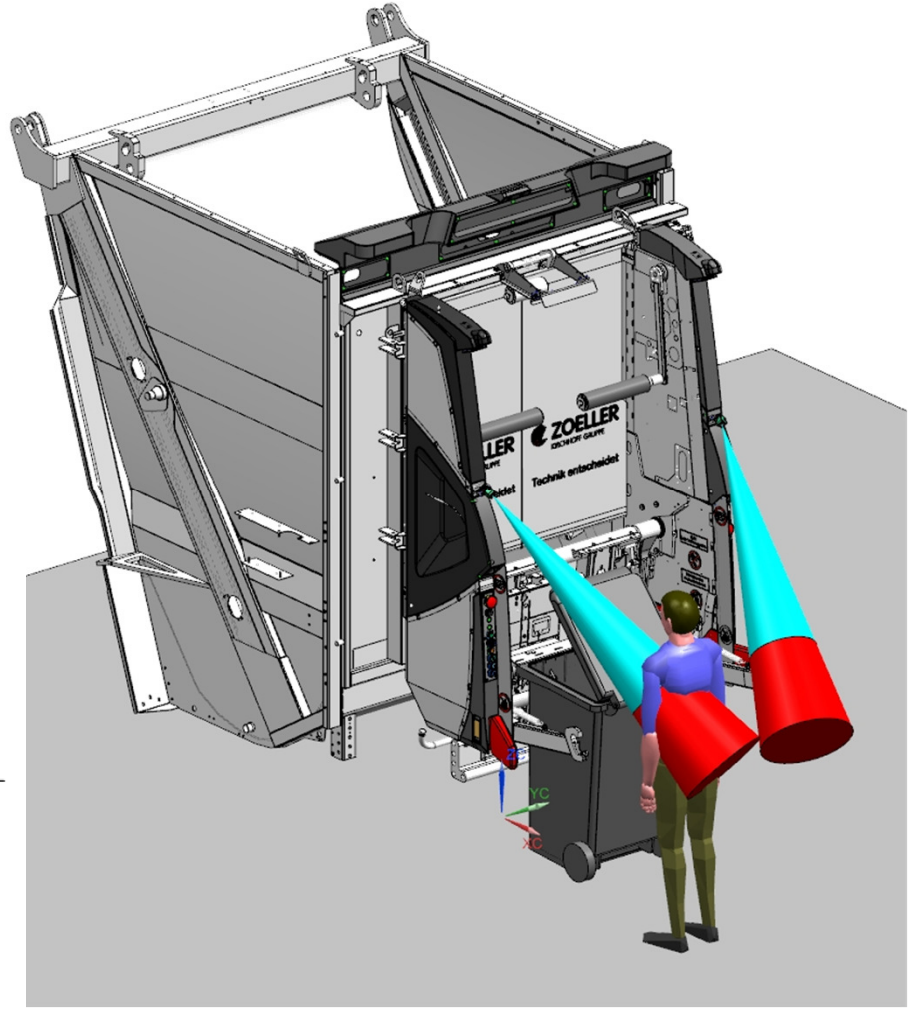

WORKER PROTECTION SYSTEM II

Process

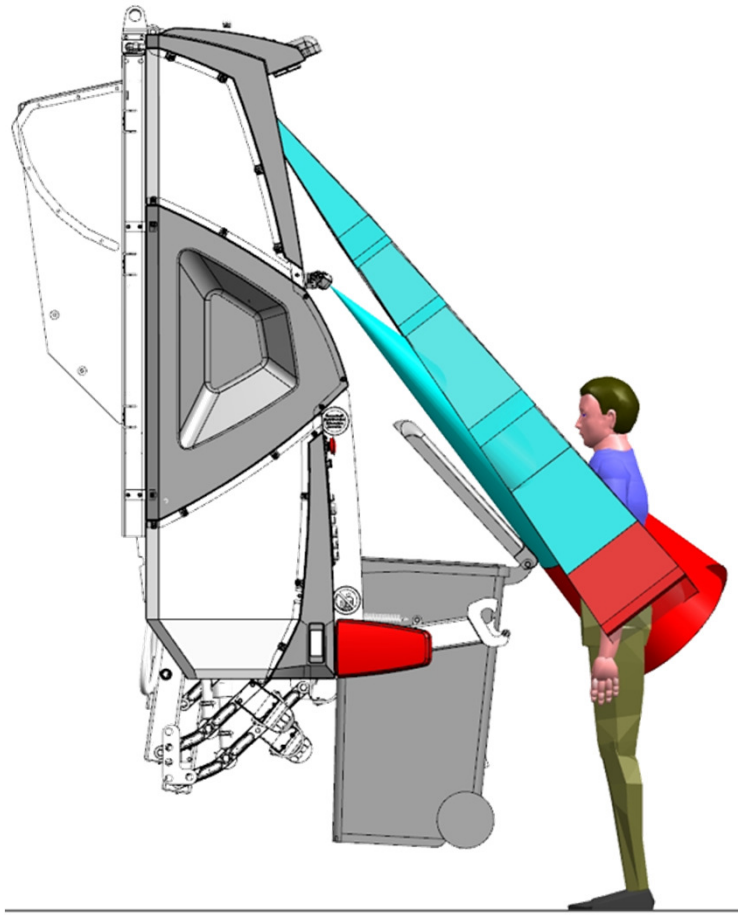

Monitoring feature

- Goal: Recognize objects

The WPS II works in two steps. Initially the system checks whether an object / person is in the danger zone during the lifting process. Afterwards the system checks itself.

First step (monitoring): Between the standardized positions of the lifting carriage of 80% (about 350mm between comb receiver and entrapment bar) and 90% (about 200mm between comb receiver and entrapment bar) of the lifting range it is checked whether an object / a person is in the danger zone. If this is the case, the automatic mode for the corresponding lifter side is interrupted. The emptying process can be continued manually.

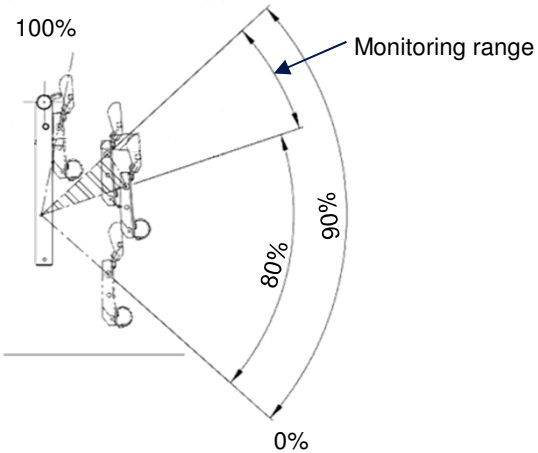

WORKER PROTECTION SYSTEM II

Process

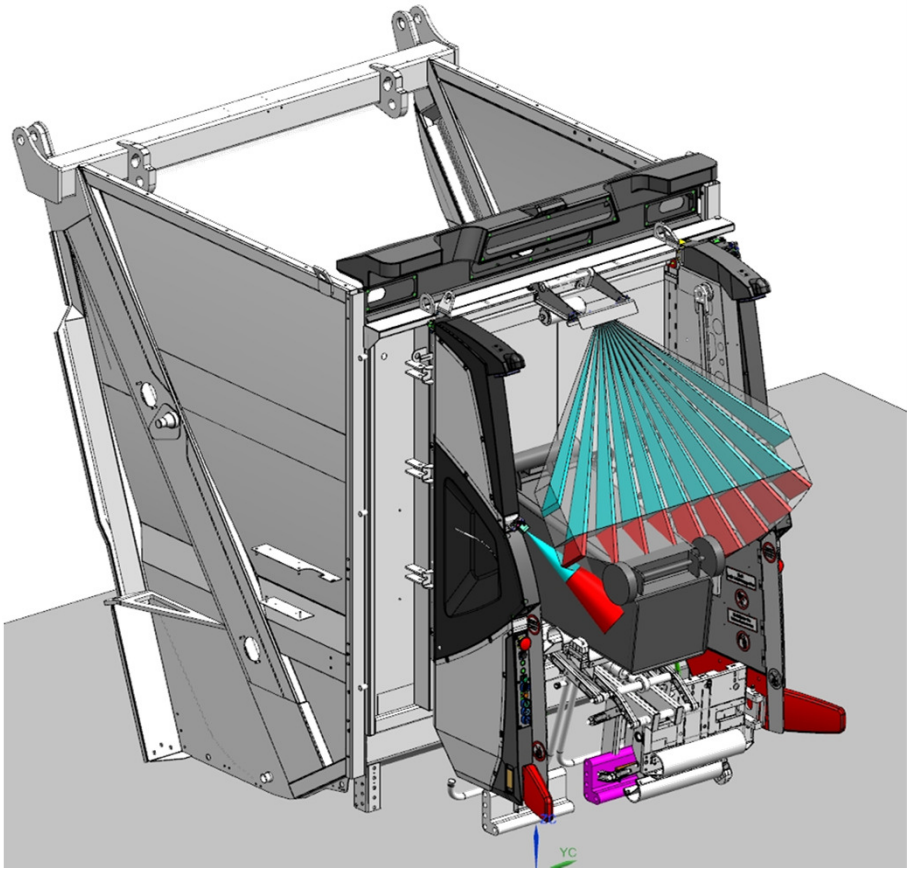

Cyclic test functions

- Goal: Make sure that the sensors are operational.

The sensors are monitored during the movement process.

Step 1: The system performs a reference measurement without a container and stores the determined measured value.

Step 2: At the transition to the rotational motion, the system will again perform a measurement and check if the reading has changed from the stored reference value. (Sensor Life check)
This ensures that the system is working. If the Sensor Life Check is negative, the automatic mode is aborted, all movements of the lifter are stopped and the container retention system is kept in the upper position so that an object or a person on the container is not caught by the over-tip buffers.

The Worker Protection System II should be checked twice a year in service.

See if necessary
”Expert opinion on the installation and operation of the Zöller Worker Protection System II (WPS II) “ of TÜV Rheinland from 27.08.2019

Contact person:
Zöller-Kipper Mainz
Department: TE

ZÖLLER – KIPPER GmbH
Hans-Zöller-Str. 50 – 68
55130 Mainz
Deutschland

www.zoeller-kipper.de

History:
May 2019 A1: Creation
Sept.2019 A1.1 Update